Constant current tunable white driver

DWL(E) Series suffix DN(DALI-2 DT8+pushDIM+pushCCT+EnergyData+EL+CLO +DALI programmable+NFC programmable)

Features

- Support DALI-2+pushDIM+pushCCT control
- Support EnergyData function and energy-reporting reading(DALI Part 252)
- Support luminaire data reading(DALI Part 251),support diagnostics-maintenance reading(DALI Part 253)
- Support advanced functions such as corridorDIM,EL,CLO
- The output current programming can be realized through the DALI interface and the NFC interface
- Soft dimming and flicker-free at any brightness
- Using HPC patented technology, at any dimming level, the brightness of the lights is the same
- High PF, high efficiency, low THD
- Screw-free and pressing type strain relief, supports thicker cables and is easier to install
- Intelligent LED hot-plug protection function
- SELV and Class II design, suitable for use outside of the luminaires
- 5.5-year guarantee

Interfaces

- DALI-2(DT8,part 251,252,253)
- PUSH (pushDIM,pushCCT,dorridorDIM)

Functions

- Support DALI part 251,252,253
- PUSH dimming (pushDIM) and PUSH color temperature (pushCCT) with memory
- Support central emergency application
- Support self-contained emergency application
- Emergency lighting(EL)
- Constant light output function(CLO)
- Corridor dimming (corridorDIM)
- Programming via DALI(EasySet)
- Programming via NFC(EasySet)
- Protective features (short-circuit, overload,no-load, over temperature, hot plug-in protection)

Suitable for lights

- Suitable for downlights or spotlights with **small mounting holes**

Typical applications

- LED indoor lighting
- LED office lighting
- LED commercial lighting

Model coding rules of DWL(E) series

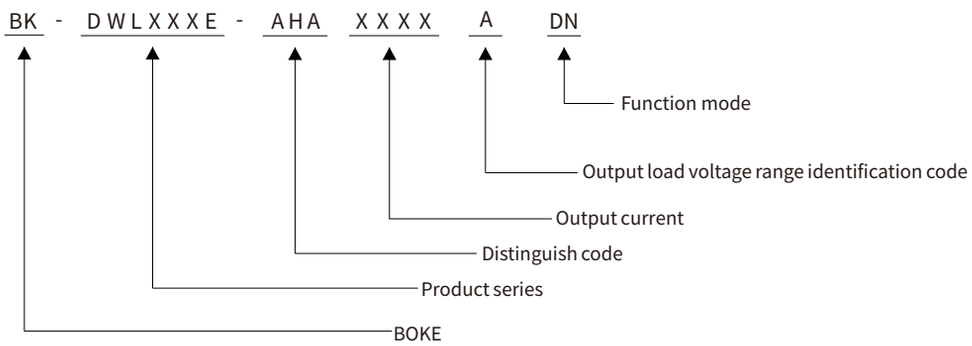

Function list

Model	suffix	DIP-switch	Wired dimming		Advanced functions					Device Configuration	
			DALI-2	PUSH(DIM/CCT)	AOC	EL	CLO	EnergyData	corridorDIM	DALI interfaces	NFC interfaces
BK-DWL010E-AHA BK-DWL013E-AHA	DP	√	√	√	√	√	√	√	√	√	
BK-DWL013E-AHA	**DN**		√	√	√	√	√	√	√	√	√

*The description in this specification is only applicable to the products with the suffix DN and the model are DWL013E-AHA.

Model list

Model	Input voltage	Output power	Output voltage	Output current	Dimension
BK-DWL010E-AHA0250ADP	200-240VAC/DC	10.5W MAX.	24-42VDC	0.1-0.25A	L129*W29.5*H20mm
BK-DWL013E-AHA0350ADP	200-240VAC/DC	13.3W MAX.	24-42VDC	0.2-0.35A	L129*W29.5*H20mm
BK-DWL013E-AHA0350ADN	200-240VAC/DC	13.3W MAX.	24-42VDC	0.1-0.35A	L129*W29.5*H20mm

*The description in this specification is only applicable to the products with the suffix DN and the model are DWL013E-AHA.

Technical data

Product model	BK-DWL013E-AHA0350ADN
Output parameters	
Regulation method	Constant Current
Rated output current range	0.1-0.35A, see the operating window for details
Rated output voltage range	24-42VDC, see the operating window for details
Rated output power	13.3W Max, see the operating window for details
Output current adjustment	EasySet programmable
Output current ripple Ipeak-prak(typ.)	±4%(82kHz)
Output current accuracy	±5%
Linear regulation	±3%
Load regulation	±3%
No load output voltage	50VDC
Flicker-free(typ.)	Flickering percent(IEEE 1789)=0.235%(100Hz),Flicker index(IEEE 1789)=0.001(100Hz), Pst LM = 0.003, SVM = 0.006, (The above parameters are obtained from testing the panel lights)
Input parameters	
Rated input voltage range	200-240VAC 200-240VDC
Input voltage range	180-264VAC 180-264VDC
Input votage shock	<380 V AC
Input current	<0.09A (Rated input voltage)
Input frequency	0/50/60Hz
Input PF/Input DF(typ.)	PF: 0.96,DF:0.96 , see the electrical values below for details
Input THD(typ.)	7.5% , see the electrical values below for details
Efficiency(typ.)	82% , see the electrical values below for details
In-rush current(typ.)	5.5A peak ,220us duration(50 % Ipeak), see the description below for details
Start/Switchover/Turn off(typ.)	0.7s(AC start),0.7s(DC start),0.3s(AC/DC switchover),0.5s(Turn off)
Switching cycles	> 100,000 switching cycles
Power consumption(typ.)	Full load(Pin):16.2W, No load(Pno):N/A, On stand-by(Psb) : <0.5W, Network stand-by(Pnet) : N/A
Safety	
Withstand voltage	I/P-O/P(LED):3750V AC, I/P-DALI: 1500V AC, O/P-DALI: 1500V AC.
Mains surge capability	L-N:2KV(90°/270°, 5 times each with an interval of 60s)(Performance criterion:A)
Leakage current(typ.)	0.6mA
Isolation resistance	I/P-O/P:100MΩ/500Vdc/25°C/70%RH
Control interface	
DALI dimming port	Voltage range: 9.5-22.5V, typical 16V, interface current consumption: 1.8mA
pushDIM dimming port	Voltage range: 180-264V 47/63Hz
1-10V 3in1 dimming port	N/A
Auxiliary power supply	N/A
Dimming range	1-100%(minimum current:3mA)
Dimming drive mode	AM(amplitude modulation)
Emergency support	
Central emergency system	Supported
Self-contained emergency	Supported
Environment & Life time	
Operating temperature	Ta=-20-50/60°C,see the Operating temperature for details
Case temperature	Tc=90°C
Operating humidity	5-85% RH, non-condensing
Storage temp./humidity	-40-80°C, 5-85% RH, non-condensing
IP grade	IP20
MTBF	500,000H,MIL-HDBK-217F(25°C)
Life-time	Nominal life-time up to 100,000 h, see the description below for details
Vibration resistant	10~500Hz,5G 12min./1cycle,period for 72min. each along X,Y,Z axes
Acoustic Noise	<25dB(30cm, Normal operation)
Environmental protection	RoHS
Certifications and standards	
Compliance certification	CCC, CE, ENEC, UKCA, RCM, DALI-2, EL
Safety	GB/T 19510.1,GB/T 19510.213, EN61347-1, EN61347-2-13, EN62384
EMC	GB/T 17743 , GB17625.1, EN55015, EN61000-3-2 , EN61000-3-3, EN61000-4-2,3,4,5,6,8,11, EN61547
DALI-2	IEC 62386-101(DALI-2), IEC 62386-102(DALI-2), IEC 62386-207(DALI-2), IEC 62386-209(DALI-2), DALI part251,252,253
EL	Compatible IEC 61347-2- 13 Annex J, compatible with EN 60598-2-22 and EN 50172
RF	N/A

Electrical values

BK-DWL013E-AHA

Efficiency vs load

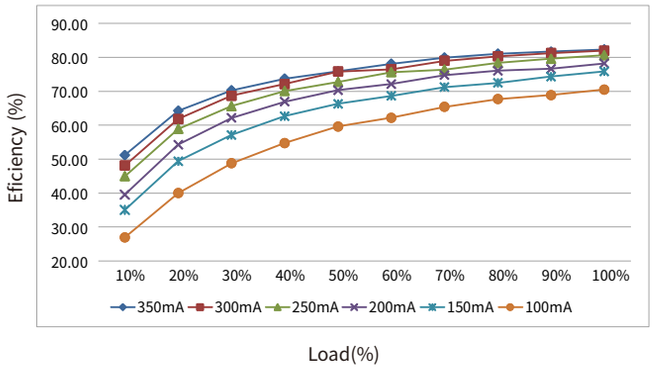

THD vs. Load

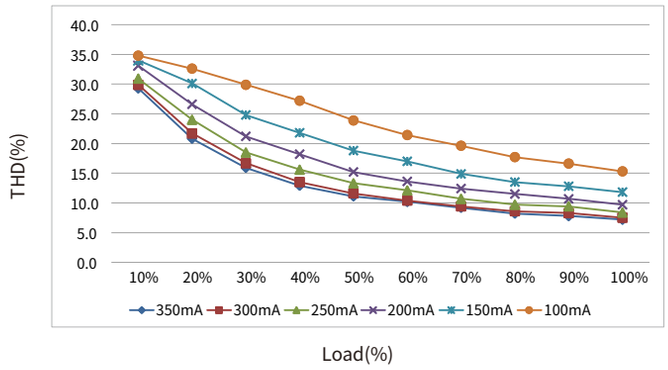

Power factor vs. Load

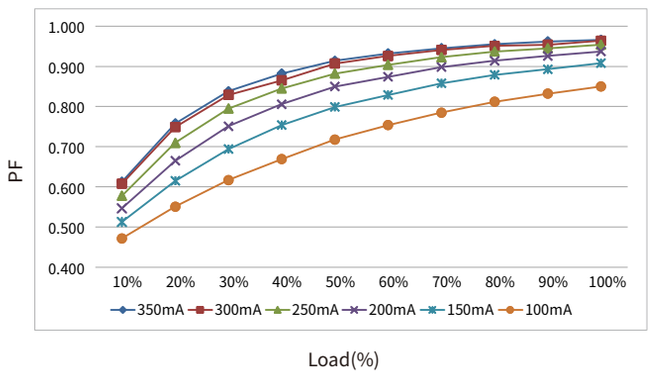

Displacement factor vs. Load

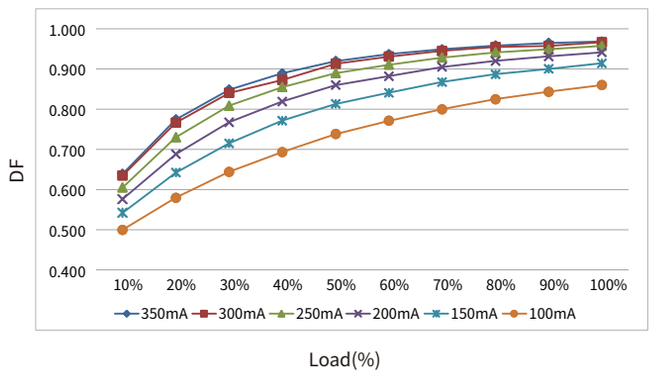

Operating window

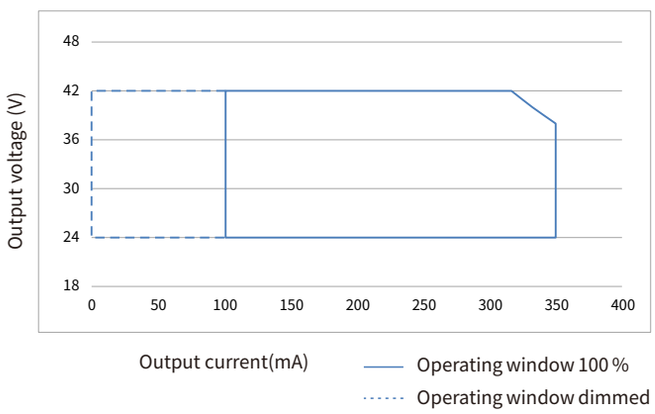

- Output voltage x output current = output power
- The minimum current step is 1mA, the minimum voltage step is 1V, the voltage range is 24-42V, the current range is 100-350mA, and the voltage and current can be set arbitrarily under the premise that the output power does not exceed 13.3W.

Expected life-time

Life-time vs. case temperature

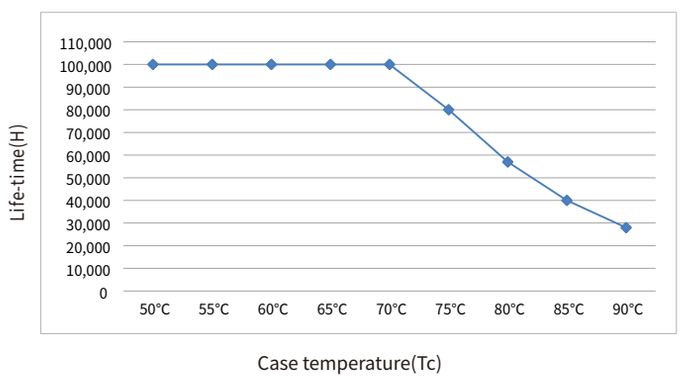

-The life-time of the LED driver is shown in the figure above (calculated based on the 90% survival rate).
- The relation of tc to ta temperature depends also on the luminaire design.

Surge

Model	Ipeak	Twidth	Condition	Relative number of MCB/pcs														
				B10	B13	B16	B20	B25	C10	C13	C16	C20	C25	D10	D13	D16	D20	D25
BK-DWL013E-AHA	5.5A	220us	AC 230V,Full load, Cold start,Ta≤30°C, MCB is not installed side by side	66	86	106	133	166	110	144	177	221	276	125	163	200	250	313

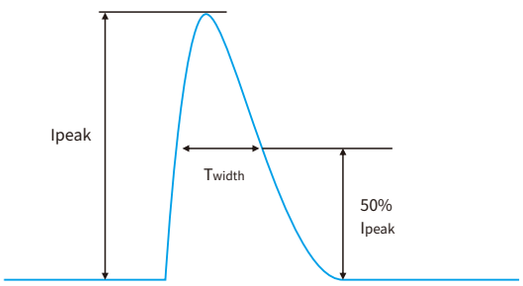

Remarks

- The number of drives mounted under different MCBs in the table is the maximum value. Please do not exceed this number during installation.
- Calculation uses typical values from ABB series S200 as a reference.
- Different brands and models of miniature circuit breakers, the number of drives mounted will be slightly different.
- If the ambient temperature of the MCB installation exceeds 30°C or multiple MCBs are installed side by side, the number of drives mounted will be reduced and the calculation needs to be recalculated.
- Electrician's usually consider Type B for household lighting and Type C for commercial lighting application.

Functions

Output short-circuit behaviour
- Output short-circuit will not damage the driver.
  After removing the short circuit fault, the driver will automatically resume output.

Output no-load operation
- Output no-load will not damage the driver.
  Please turn off the driver first if you need to connect the LED load.

Output overload protection
- The LED driver turns off the output if the output voltage range is exceeded.
  The output will be activated again after restart the LED driver .

Ouput over temperature
- When the operating temperature exceeds the over temperature protection point inside the power supply IC, the power supply enters protection state such as output derating,output hiccup or output shutdown. After the external temperature is normal, restart and resume operation.

Output hot plug-in protection
- This function is used to prevent LED light that are far below the driver's no-load voltage burnout when hot plugged into a powered driver output.
- This function can be enabled or disabled through the programming interface.
  If enabled, when the LED light is connected to the powered driver, the LED light will not light up, you can restart the drive to restore normal.
  If disabled, when the LED light is connected to the powered driver, the LED light will turn on or off according to the current brightness level.
- Please refer to the parameters configure in the "Device configuration" section for information on whether the default factory settings are enabled.
- Factory default Enabled or not please check the"Device configuration"section.

- Note:
  When the hot plug-in protection is enable, the following applications may not achieve the expected effect:
  1. When the output of the driver is connected to the color temperature switch: When the switch is used to change the color temperature, the hot plug-in protection of the driver will be triggered, and the LED will not be lit.
  2. When the LED driver is used in conjunction with a self-contained (independent) emergency control device:
     Use the self-check test switch of the emergency control device to test the emergency function and when exiting the emergency mode, the driver's hot plug-in protection will be triggered and the LED will not be lit.

  The above two application drivers should turn off the hot plug-in protection function in order to achieve good working results.

Driver restart method

There are two ways to restart the driver:
- Through the AC input:disconnect the AC of the driver and power it again.
- Through dimming interface.
  DALI:send “OFF” command first,then send “MAX” command.
  pushDIM:short press pushbutton two times,then long press pushbutton.

Tunable white functionality
- This driver have 2 output channels used to control the intensity and temperature of white colour as well known as “Tunable White”.
- These drivers respond to DALI type 8 (DT8) commands, which in practice means that they only have 1 common address for both output channels .
- The tunable white level of intensity and colour temperature can be set either with a DALI command or by PUSH switch control.
- The higher the brightness, the wider the color temperature range can be obtained.

Adjustable output current (AOC)
- The output current of the driver can be adjusted within a certain range, and can be selected through the EasySet configuration software.

Corridor dimming (corridorDIM)
- Please see the "corridorDIM dimming" section.

Constant light output (CLO)
- The luminous flux of a LED decreases constantly over the life-time.
- The CLO function ensures that the emitted luminous flux remains stable. For that purpose the LED current will increase continuously over the LED life-time.
- In EasySet configuration it is possible to select a start value(in percent)and an expected life-time.The LED driver adjusts the current afterwards automatically.

Emergency lighting(EL)
- The driver works normally under DC input.
- When the driver is applied in DC input, the positive pole of the DC cable should be connected to the ACL/DC+ terminal, and the negative pole of the DC cable should be connected to the ACN/DC- terminal. If the connection is reversed, the driver will not be damaged, but it will affect the EL function normal work.
- The output response action after DC input can be set through the EasySet configuration software.
  Setting 1: When DC input, the output of the driver remains unchanged, and the dimming function responds normally.
  Setting 2 (default): When DC input, the output of the driver jumps to the set brightness of 15%, and the dimming function is invalid.

Configuration programming(EasySet)
- The programming configuration of the driver is realized using the BOKE EasySet programming suite and through the driver's DALI interface or NFC interface.
- Please see the "Device configuration" section.
- More information about the EasySet programming suite can be found at www.bokedriver.com.

Insulation between circuits

Isolation	Input	Output	Case	DALI	PUSH
Input	-	Double	Double	Basic	-
Output	Double	-	Basic	Double	Double
Case	Double	Basic	-	Double	Double

Label

BK-DWL013E-AHA0350ADN

Laser engraving technique

Operating temperature & output current

BK-DWL013E-AHA0350ADN

TC	Ta	Output Prated(W)
90°C	50°C	≤13.3
	60°C	≤9

DALI dimming application

Wiring diagram

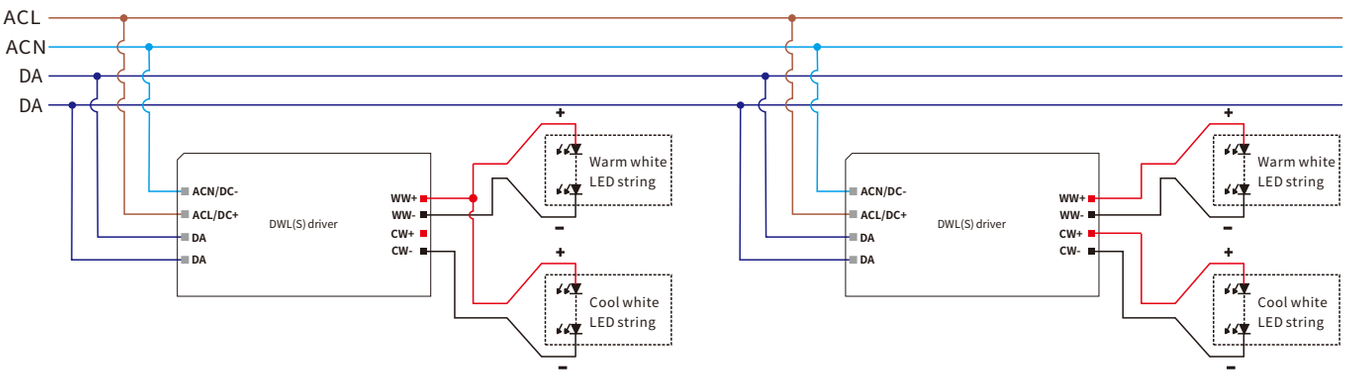

- Support common anode circuit connection

- Support independent circuit connection

- The voltage deviation of warm white and cool white light strings should be less than 0.5V

Switch to the DALI dimming mode

- After installation according to the wiring diagram of DALI dimming application,the driver will automatically switch to the DALI control mode after receiving any DALI command.

Remarks:

- Standard DALI control line voltage range:9.5V to 22.5V ,type 16V.
- The two DALI control lines polarity-reversible.
- Max. 64 DALI drivers per DALI control line.
- The maximum distance length of the DALI control line is 300m at 2×1.5mm^2.
- DALI bus can be wired together with any mains voltage cables, but separate wiring is recommended.
- The configuration parameters of the driver can be set through the DALI configuration tool or DALI application controller during installation, such as setting device address, group address, power-on level, bus-failure level, scene level, fade time, dimming curve, etc.

Please refer to the table below

Cable size	Distance
2×0.50mm^2	max.100m
2×0.75mm^2	max.150m
2×1.00mm^2	max.200m
⩾2×1.50mm^2	max.300m

Power-on level :

When the driver is in DALI-2 dimming mode, the factory default level after each power-on is the brightest.

The power-on level can be set through the DALI configuration tool or DALI application controller during installation, and can be set to memory or fixed any brightness (such as off, darkest, 50%, etc.).

Note: The recommended setting for the default factory power-on level of the DALI-2 driver is the brightest in the DALI-2 standard.

Dimming curve

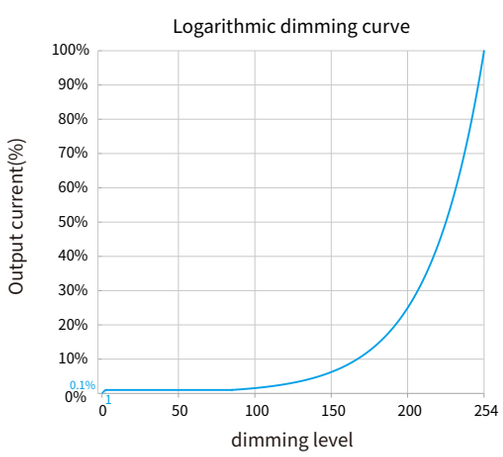

Remarks: The dimming curve can be selected by DALI configuration. The default is logarithmic dimming curve.

pushDIM dimming application

Wiring diagram

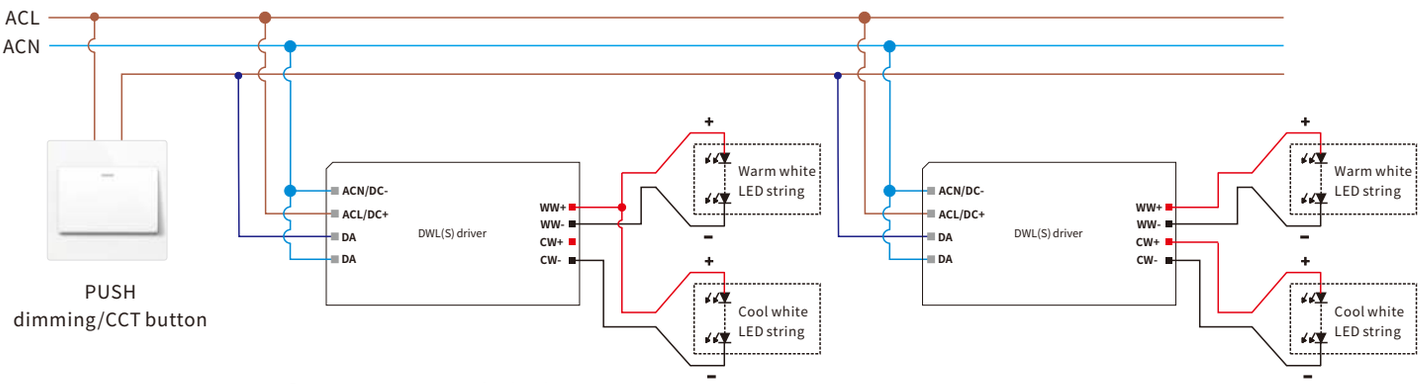

- Support common anode circuit connection
- Support independent circuit connection
- The voltage deviation of warm white and cool white light strings should be less than 0.5V

Swatch to pushDIM,pushCCT control mode

- After installation according to the wiring diagram of pushDIM,pushCCT control application, short press the pushbutton(PUSH port) 5 times within 3 seconds, the driver will automatically switch to pushDIM,pushCCT control mode.
- After switch to the pushDIM control mode, CorridorDIM mode will be automatically closed.

PUSH dimming switch operating instructions

- Turn on or turn off: short press pushbutton for 0.2-1s.
- Stepless dimming : long press pushbutton to adjust the brightness (default dimming time is 6s), Press again to switch dimming directions.

PUSH CCT switch operating instructions

- Stepless CCT adjustment: long press the pushbutton until the brightness output is maximum, continue to press the pushbutton, the color temperature will automatically switch to the coldest, and then slowly gradually change to the warmest, and change back and forth. When the pushbutton is released when the desired color temperature is adjusted, the power supply will stop the color temperature change and save the current color temperature.

Power on status:

- After power on,the light state will be the same as the last dimming level and the last CCT level.
- If the light is on before the power is turned off, after turning the power back on, the brightness will be the same as the last time, and the color temperature will be the same as the last time.
- If the light is off before the power is turned off, the light will be turned off after the power is turned back on. You need to press the pushbutton for a short time to turn on the light. The brightness after lighting will be the same as the last time, and the color temperature will be the same as the last time.

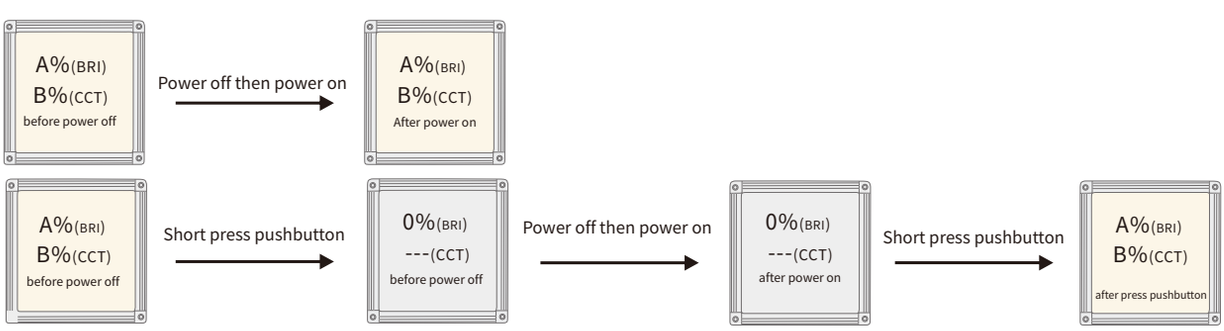

Multiple lights synchronize brightness operations

Step 1:long press the pushbutton,confirm each light is on.

Step 2:short press the pushbutton,confirm each light is off.

Step 3:long press the pushbutton,confirm each light is from darkest to brightest and all the lights are synchronous.

Multiple lights synchronized color temperature operation

Step 1:long press the pushbutton,confirm each light is on.

Step 2:short press the pushbutton,confirm each light is off.

Step 3:long press the pushbutton,confirm each light is from darkest to brightest and all the lights are synchronous.

Step 4:continue to press and hold the pushbutton until all driver color temperatures change simultaneously.

corridorDIM dimming application

Wiring diagram

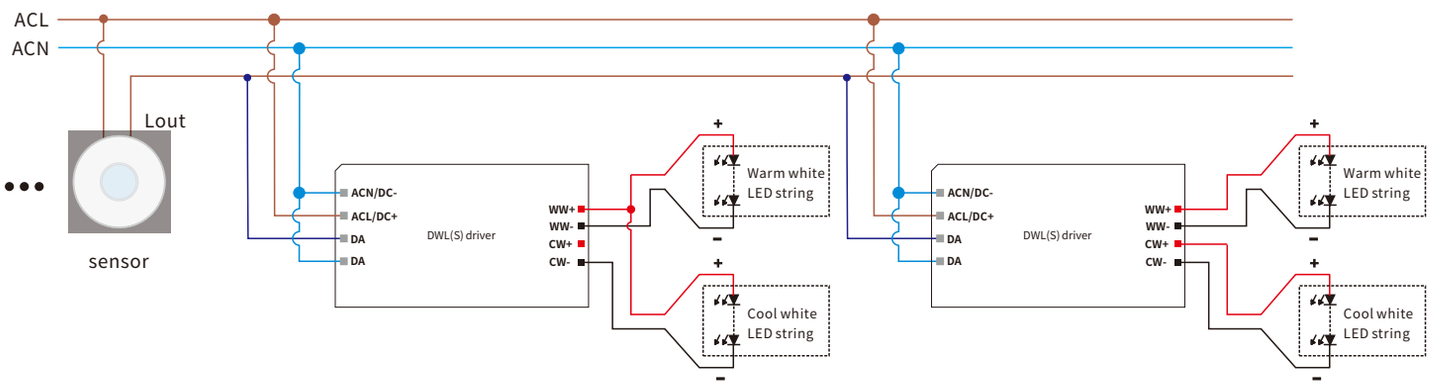

- Support common anode circuit connection

- Support independent circuit connection

- The voltage deviation of warm white and cool white light strings should be less than 0.5V

Switch to the corridorDIM dimming and color temperature mode

- Method 1: Switch by sensor.

After installation according to the wiring diagram of corridorDIM dimming and color temperature application, you can use the following two methods to switched.

Method 1: Keep the movement in the effective sensing area for 5 minutes, the corridorDIM dimming and color temperature function of the driver will be switched and output 100% brightness 100% color temperature (under the default setting).

Method 2: Switch by Hold-time

Set the hold-time of the sensor to more than 5 minutes. When the motion sensor detects a person and turns on the output for 5 minutes, the corridorDIM dimming and color temperature function will be switched and output 100% brightness 100% color temperature (Default), finally restore the hold-time that the sensor actually needs.

-Method 2: Switch by normal switch

After installation according to the wiring diagram of the corridorDIM dimming and color temperature application, first replace the sensor with a normal switch, and then turn on the normal switch for 5 minutes, and the driver will automatically switch to corridorDIM dimming and color temperature mode, then remove the normal switch and replace it with the sensor.

- After switch to the corridorDIM dimming and color temperature mode, the pushDIM dimming and color temperature mode will be automatically deactivate .

Remarks

- During normal working,It is recommended to set the hold-time of the motion sensor to the minimum.
- Need to use a motion sensor with AC switch.

corridorDIM working process

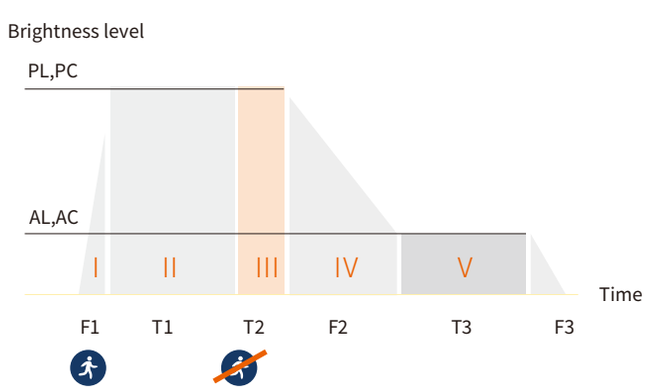

- The parameters of corridorDIM can be set through the configuration tool.
- corridorDIM is activated by default.

Name	Symbol	Factory setting	Settable range
Fade-in time	F1	1s	0-100s
Presence level	PL	100%	0-100%
Presence CCT	PC	100%(the coldest)	0-100%
Hold-on time	T1	By sensor setting	
Run-on time	T2	180s	0-60000s
Fade-out time	F2	5s	0-100s
Absence level	AL	10%	0-100%
Absence CCT	AC	100%(the coldest)	0-100%
Stand-by Time	T3	unlimited	0-59999s,60000s(unlimited)
Fade-off time	F3	0s	0-100s

Device configuration

Optional 1:

BOKE EasySet(PC)

NFC Reader

- Driver in unpowered/de-energized state
- The voltage deviation of warm white and cool white light strings should be less than 0.5V
- Support independent and anode circuit connection

BOKE EasySet(APP)

NFC Buletooth Reader

- Driver in unpowered/de-energized state
- The voltage deviation of warm white and cool white light strings should be less than 0.5V
- Support independent and anode circuit connection

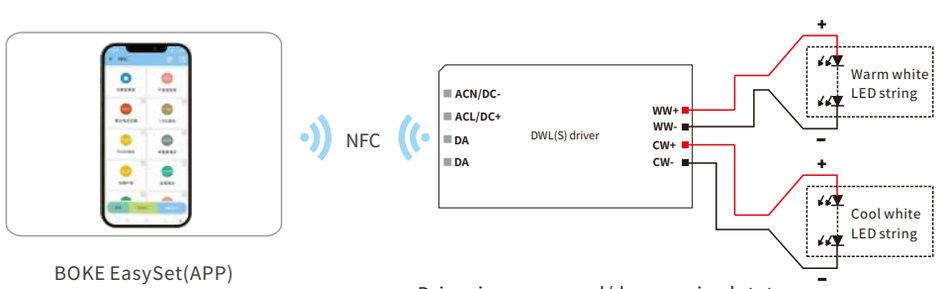

BOKE EasySet(APP)

- Driver in unpowered/de-energized state
- The voltage deviation of warm white and cool white light strings should be less than 0.5V
- Support independent and anode circuit connection

NFC scanning area

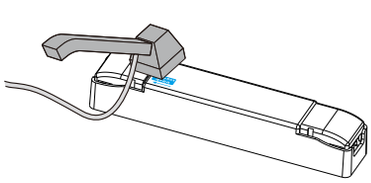

Error scanning mode

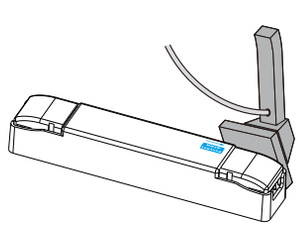

Correct scanning mode

Optional 2:

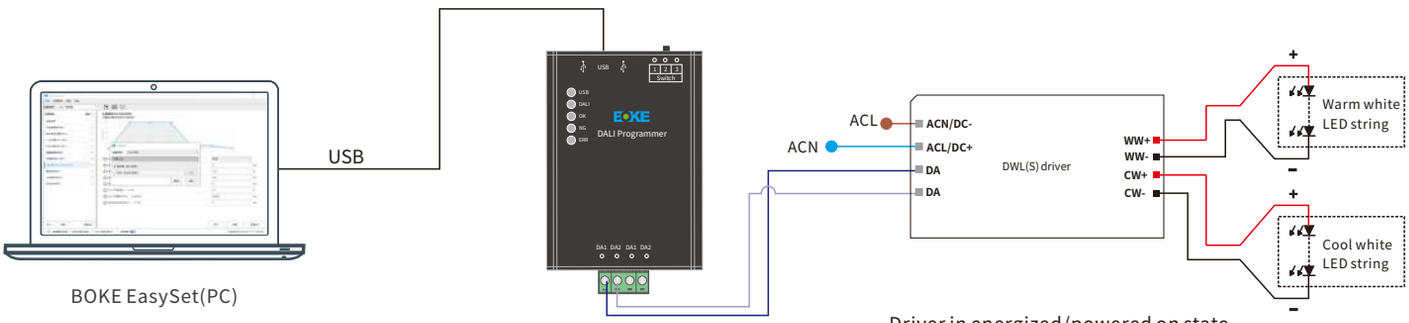

- Driver in energized/powered on state
- The voltage deviation of warm white and cool white light strings should be less than 0.5V
- Support independent and anode circuit connection

Software download(PC&mobile)

PC:Windows7/Windows10/Windows1132bit/64bit;
Mobile:Androidsystem≥6.0, iossystem≥14.0.

Configure tools and software

Type	Name	Brand	Name	BOKE EasySet minimum version(PC)	BOKE EasySet minimum version(APP)
Programmer	NFC desktop Reader	FEIG	CPR30+	V1.0.0	-
	NFC handheld Reader	FEIG	ID ISC-PRH101-USB	V1.2.2	-
	NFC Bluetooth Reader	FEIG	ID ECCO Smart HF-BLE	-	V1.0.0
	NFC batch Reader Kit	FEIG	RF-LRM1002-300/300 Kit	V1.3.4	-
	DALI programmer	BOKE	BK-CS01-SDL	V1.0.0	-
Software	PC Software	BOKE	BOKE EasySet	V1.0.0	-
	APP	BOKE	BOKE EasySet	-	V1.0.0

Parameters configure

Configuration items	Factory settings	Parameter configuration	Read/Write
Product information	-	NO	Read Only
Adjustable output current(AOC)	Activated	YES	Read/Write
PUSH dimming(pushDIM)	Activated	YES	Read/Write
Corridor dimming(corridorDIM)	Activated	YES	Read/Write
Emergency lighting(EL)	Activated	YES	Read/Write
Power-on fadeing(POF)	Deactivated	YES	Read/Write
Constant light output(CLO)	Deactivated	YES	Read/Write
Hot plug-in protection(HPP)	Deactivated	YES	Read/Write
Run-time(RT)		NO	Read Only
DALI Address(DA)	Activated	YES	Read/Write
DALI basic parameters(DP)	Activated	YES	Read/Write
DALI scene setting(DS)	Activated	YES	Read/Write
Luminaire data (LMD)	Activated	YES	Read/Write
Other parameters		YES	

Note: The default factory mode of emergency lighting is derated mode, and the emergency brightness is 15%

Mechanical Specification

Size

Unit:mm

DWL013E-AHA

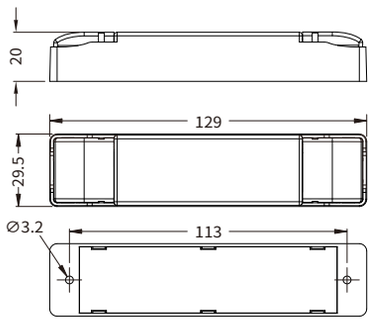

INPUT

Numbering	function	colour
1	ACN/DC-	grey
2	ACL/DC+	grey
3	DA	grey
4	DA	grey

Input wire
0.75-1.5mm²

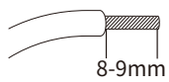

OUTPUT

Numbering	function	colour
1	WW+	red
2	WW-	black
3	CW+	red
4	CW-	black

Output wire
0.5-1.0mm²

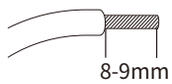

Installation note

Hot plug-in

- When the function is not enabled, hot plug-in is not supported due to residual output voltage of > 0 V.
- If a LED load is connected the device has to be restarted.
- Restart can be achieved by re-powering the driver or executing a on/off command (action) through the control interface.

Installation requirements

- The driver should be installed in a dry, acid-free, oil-free, fat-free environment.
- The installation ambient temperature of the driver shall not exceed the value of Ta at any time.
- The temperature of the mounting surface of the driver should be lower than the temperature of Ta.
- The driver should keep a certain distance from the heating stuff (such as the lamp radiator).
- If the driver is used externally (it needs to be used with the power end cover), the installation of the driver should also meet the following conditions:
  1.The driver should be a certain distance between the drives, as shown in Figure 1.
  2.The driver keeps a certain distance from surrounding objects, as shown in Figure 2.

Wiring guidelines

- Prohibit the use of single LED output in DT8 mode
- All connections must be kept as short as possible to ensure good EMI behaviour.
- Mains leads should be kept apart from LED Driver and other leads (ideally 5-10 cm distance).
- Max. lenght of output wires is 2m.
- Incorrect wiring can damage LED modules.

LED module

- The voltage deviation of warm white and cool white light strings should be less than 0.5V.

Replace LED module

1. Mains off
2. Wait more than 5 seconds
3. Remove LED module
4. Connect LED module again

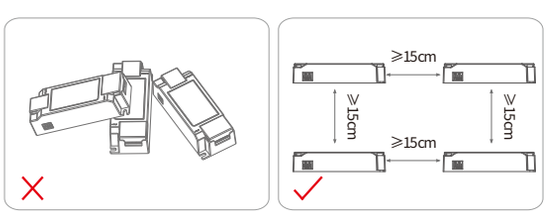

Figure 1

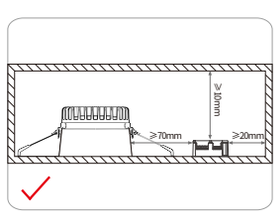

Figure 2

Packaging

Product

Packaging

20pcs×4boxes=80pcs/CTN

Model	Product size	Weight	Packaging size	Carton size	Qty/carton	N.W	G.W
DWL013E-AHA	L129*W29.5*H20mm	65g	L215*W172*H67mm	L365*W235*H155mm	80pcs	5.20KG	6.45KG

Additional information

- **When the driver is used as an internal power supply for luminaires, re-evaluation of performance including temperature rise, conducted interference, radiated interference, surge immunity and electrostatic discharge (ESD) are required due to differences in luminaire structure and wiring. Ensure compliance with practical application requirements and stable & reliable operation of the driver.**
- Unless otherwise specified, all specifications and parameters are measured under conditions of 230VAC input, 50Hz, full load and ambient temperature of 25°C.
- Product service life and MTBF values are for reference only and do not constitute a warranty statement.
- BOKE reserves the final right to interpret the above parameters. For further information, please send an email to info@bokedriver.com.
- The above information is subject to change without prior notice. Please ensure you use the latest version of the datasheet.