Constant current independent driver

DQL(S) Series suffix DN(DALI-2+pushDIM+EnergyData+EL+CLO+corridorDIM +DALI programmable+NFC programmable)

Features

- Support DALI-2+pushDIM mode
- Support EnergyData function and energy-reporting reading(DALI Part 252)
- Support luminaire data reading(DALI Part 251),support diagnostics-maintenance reading(DALI Part 253)
- Support advanced functions such as corridorDIM,EL,CLO
- The output current programming can be realized through the DALI interface and the NFC interface
- Soft dimming and flicker-free at any brightness
- Using HPC patented technology, at any dimming level, the brightness of the lights is the same
- Standby power input<0.5W, meets the requirements of ErP certification
- High PF, high efficiency, low THD
- Optional Junction box: support up to 2.5mm^2 cable and loop-through function
- Screw-free and pressing type strain relief, supports thicker cables and is easier to install
- Independent input and output strain relief, stronger wiring
- Intelligent LED hot-plug protection function
- SELV and Class II design, suitable for use outside or inside of the luminaires
- Compliance with Zhaga Book 24/25 standards
- Passed CE,ENEC,UKCA,RCM,DALI-2 and other certifications
- IP20 protection grade, indoor use
- Nominal life-time up to 100,000 h
- 5.5-year guarantee

Interfaces

- DALI-2(DALI-2 DT6)
- PUSH(pushDIM,corridorDIM)

Functions

- Support DALI part 251,252,253
- Support central emergency application
- Support self-contained emergency application
- Emergency lighting(EL)
- Constant light output function(CLO)
- Corridor dimming (corridorDIM)
- Programming via DALI(EasySet)
- Programming via NFC(EasySet)
- Protective features (short-circuit,no-load,overload,over temperature, hot plug-in protection)

Suitable for lights

- Suitable for lights with independent drivers such as downlights, spotlights, panel lights, etc
- It is necessary to evaluate the chamber temperature of the light when it is used in the built-in

Typical applications

- LED educational lighting
- LED indoor lighting
- LED office lighting
- LED commercial lighting

Model coding rules of DQL(S) series

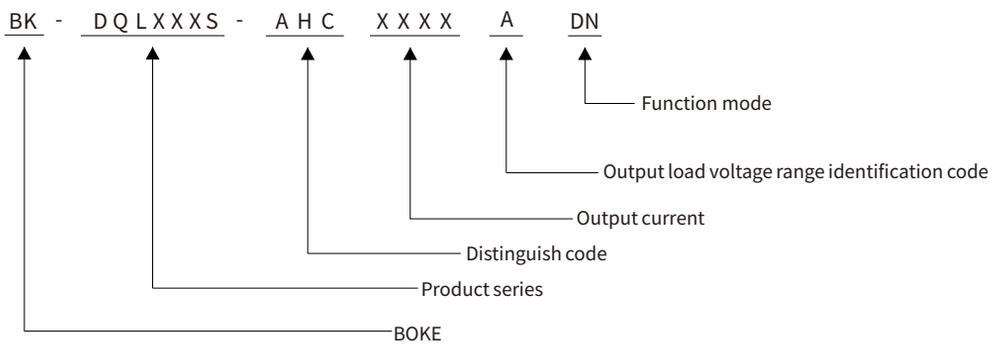

Function list

Model	suffix	DIP-switch	Wired dimming		Advanced functions					Device Configuration	
			DALI-2	pushDIM	EnergyData	corridorDIM	AOC	EL	CLO	DALI interfaces	NFC interfaces
BK-DQL042S	DP	√	√	√	√	√	√	√	√	√	
	DN		√	√	√	√	√	√	√	√	√

*The description in this specification is only applicable to the products with the suffix DN and the model are DQL042S.

Model list

Model	Input voltage	Output power	Output voltage	Output current	Dimension
BK-DQL042S-AHC1050ADP	200-240VAC/DC	42W MAX.	6-54VDC	0.3-1.05A	L97.5*W44*H23.4mm(Built-in) L137.5*W44*H23.4mm(Independent)
BK-DQL042S-AHC1050ADN	200-240VAC/DC	42W MAX.	6-54VDC	0.1-1.05A	L97.5*W44*H23.4mm(Built-in) L137.5*W44*H23.4mm(Independent)

*The description in this specification is only applicable to the products with the suffix DN and the model are DQL042S.

Technical data

Product model	BK-DQL042S-AHC1050ADN
Output parameters	
Regulation method	Constant Current
Rated output current range	0.1-1.05A ,see the operating window for details
Rated output voltage range	6-54VDC ,see the operating window for details
Rated output power	42W Max ,see the operating window for details
Output current adjustment	EasySet Programming
Output current ripple(typ.)	±5%(@>250mA)(100Hz),±10%(@≤250mA)(100Hz)
Output current accuracy	±5%(@>250mA),±10%(@≤250mA)
Linear regulation	±5%
Load regulation	±5%
No load output voltage	60VDC
Flicker-free(typ.)	Flickering percent(IEEE 1789)=0.424%(100Hz), Flicker index(IEEE 1789)=0.001(100Hz), Pst LM = 0.032, SVM = 0.011, (The above parameters are obtained from testing the panel lights)
Input parameters	
Rated input voltage range	200-240VAC 200-240VDC
Input voltage range	180-264VAC 180-264VDC
Input votage shock	<380 V AC
Input current	<0.24A (Rated input voltage)
Input frequency	0/50/60Hz
Input PF/Input DF(typ.)	PF:0.97, DF:0.98 ,see the electrical values below for details
Input THD(typ.)	9% ,see the electrical values below for details
Efficiency(typ.)	90.5% ,see the electrical values below for details
In-rush current(typ.)	2.02A peak ,70us duration(50 % Ipeak), see the description below for details
Start/Switchover/Turn off	<0.7s(AC start),<0.7s(DC start),<0.3s(AC/DC switchover),<0.5s(Turn off)
Switching cycles	> 100,000 switching cycles
Power consumption(typ.)	Full load(Pin):46.4W, No load(Pno): N/A, On stand-by(Psb) : <0.5W, Network stand-by(Pnet) : N/A
Safety	
Withstand voltage	I/P-O/P(LED):3750V AC, I/P-DALI: 1500V AC, O/P-DALI: 1500V AC.
Mains surge capability	L-N:2KV(90°/270°, 5 times each with an interval of 60s)(Performance criterion:B)
Leakage current(typ.)	0.67mA
Isolation resistance	I/P-O/P:100MΩ/500Vdc/25°C/70% RH
Control interface	
DALI dimming port	Voltage range: 9.5-22.5V, typical 16V, interface current consumption: 1.8mA
pushDIM dimming port	Voltage range: 180-264V 47/63Hz
1-10V dimming port	N/A
Auxiliary power supply	N/A
Dimming range	0.1-100%(minimum current:1mA)
Dimming drive mode	AM+PWM(<10%)
Emergency support	
Central emergency system	Supported
Self-contained emergency	Supported
Environment & Life time	
Operating temperature	Ta=-20-50/55/60°C,see the operating temperature for details
Case temperature	Tc=85°C
Operating humidity	5-85% RH, not condensed
Storage temp./humidity	-40-80°C, 5-85% RH, not condensed
IP grade	IP20
MTBF	500,000H,MIL-HDBK-217F(25°C)
Life-time	Nominal life-time up to 100,000 h, see the description below for details
Vibration resistant	10~500Hz,5G 12min./1cycle,period for 72min. each along X,Y,Z axes
Acoustic Noise	<25dB(30cm, Normal operation)
Environmental protection	RoHS
Certifications and standards	
Certifications	CCC, CE, ENEC, UKCA, RCM, EL, DALI-2
Safety	GB/T 19510.1, GB/T 19510.213, EN61347-1, EN61347-2-13, EN62384
EMC	GB/T 17743 , GB17625.1, EN55015, EN61000-3-2 , EN61000-3-3, EN61000-4-2,3,4,5,6,8,11, EN61547
DALI-2	IEC 62386-101(DALI-2), IEC 62386-102(DALI-2), IEC 62386-207(DALI-2), DALI part251,252,253
EL	Compatible IEC 61347-2- 13 Annex J, compatible with EN 60598-2-22 and EN 50172
RF	N/A

Remarks

1.By default, all parameter are measured at 230VAC input,50Hz, full load and 25°C of ambient temperature.
2.When the driver is used with the luminaire, the EMC of the whole luminaire needs to be tested.

Electrical values

BK-DQL042S-AHC1050ADN

Efficiency vs load

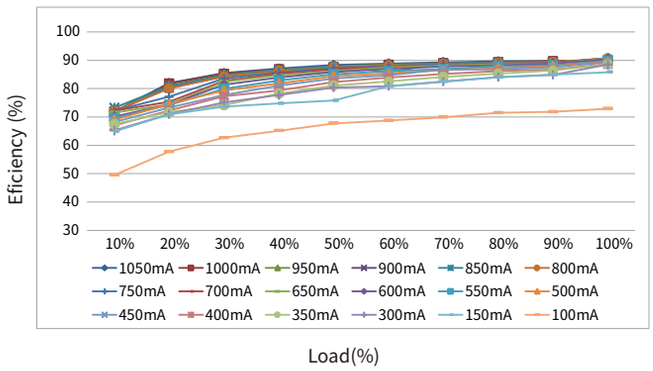

THD vs. Load

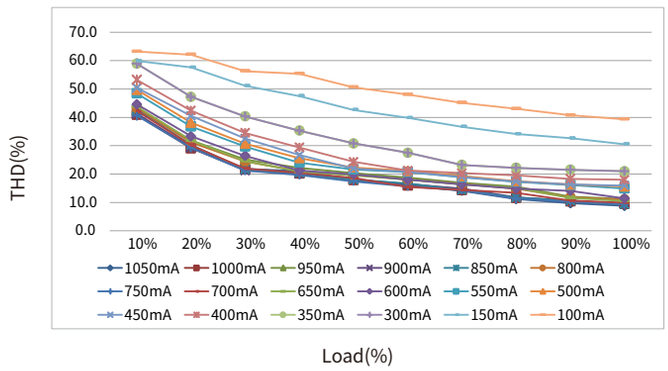

Power factor vs. Load

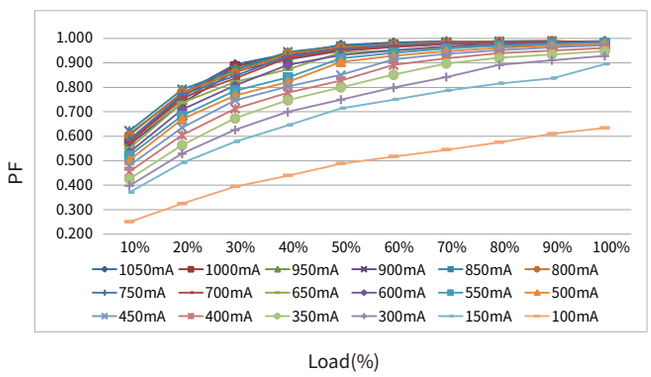

Displacement factor vs. Load

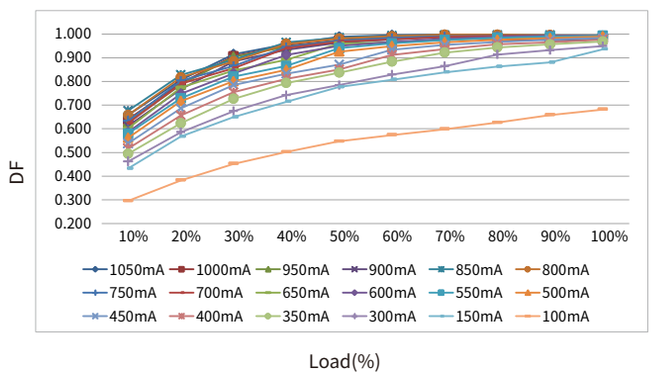

Operating window

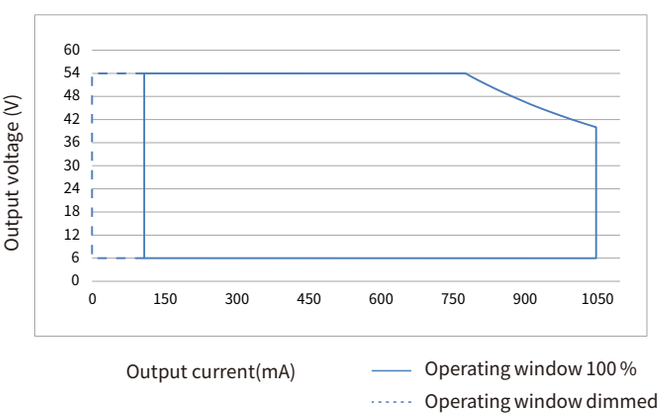

- Output voltage x output current = output power
- The minimum current step is 1mA, the minimum voltage step is 1V, the voltage range is 6-54V, the current range is 100-1050mA, and the voltage and current can be set arbitrarily under the premise that the output power does not exceed 42W.

Expected life-time

Life-time vs. case temperature

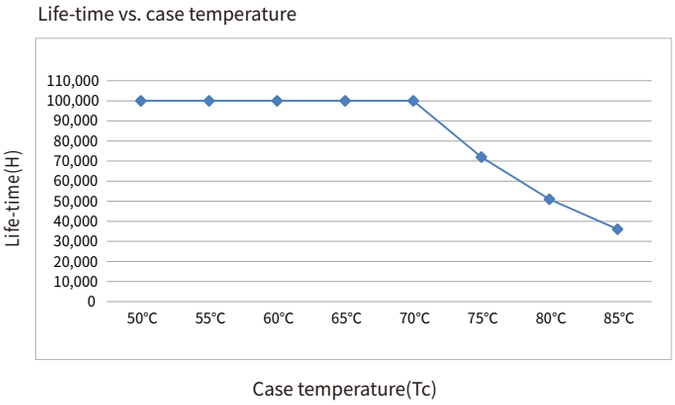

-The life-time of the LED driver is shown in the figure above (calculated based on the 90% survival rate).
- The relation of tc to ta temperature depends also on the luminaire design.

Surge

Model	Ipeak	Twidth	Condition	Relative number of MCB/pcs														
				B10	B13	B16	B20	B25	C10	C13	C16	C20	C25	D10	D13	D16	D20	D25
BK-DQL042S-AHC	2.02A	70us	AC 230V,Full load, Cold start,Ta≤30°C, MCB is not installed side by side	38	50	62	77	96	38	50	62	77	96	38	50	62	77	96

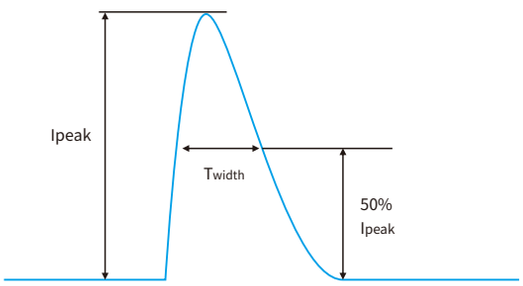

Remarks

- The number of drives mounted under different MCBs in the table is the maximum value. Please do not exceed this number during installation.
- Calculation uses typical values from ABB series S200 as a reference.
- Different brands and models of miniature circuit breakers, the number of drives mounted will be slightly different.
- If the ambient temperature of the MCB installation exceeds 30°C or multiple MCBs are installed side by side, the number of drives mounted will be reduced and the calculation needs to be recalculated.
- Electrician's usually consider Type B for household lighting and Type C for commercial lighting application.

Functions

Output short-circuit behaviour

- Output short-circuit will not damage the driver.
  After removing the short circuit fault, the driver will automatically resume output.

Output no-load operation

- Output no-load will not damage the driver.
  Please turn off the driver first if you need to connect the LED load.

Output overload protection

- The LED driver turns off the output if the output voltage range is exceeded.
  The output will be activated again after restart the LED driver .

Ouput over temperature

- When the operating temperature exceeds the set over temperature protection value of the internal circuit of the power supply, the power supply enters protection states such as output derating, output hiccup or output shutdown. After the external temperature is normal, restart and resume operation.

Output hot plug-in

- This function is used to prevent LED light that are far below the driver's no-load voltage burnout when hot plugged into a powered driver output.
- This function can be enabled or disabled through the programming interface.
  If enabled, when the LED light is connected to the powered driver, the LED light will not light up, you can restart the drive to restore normal.
  If disabled, when the LED light is connected to the powered driver, the LED light will turn on or off according to the current brightness level.
- Please refer to the parameters configure in the "Device configuration" section for information on whether the default factory settings are enabled.
- Factory default Enabled or not please check the "Device configuration" section .

- Note:
  When the hot plug-in protection is enable, the following applications may not achieve the expected effect:
  1. When the output of the driver is connected to the color temperature switch:
     When the switch is used to change the color temperature, the hot plug-in protection of the driver will be triggered, and the LED will not be lit.
  2. When the LED driver is used in conjunction with a self-contained (independent) emergency control device:
     Use the self-check test switch of the emergency control device to test the emergency function and when exiting the emergency mode, the driver's hot plug-in protection will be triggered and the LED will not be lit.

  The above two application drivers should turn off the hot plug-in protection function in order to achieve good working results.

Driver restart method

There are two ways to restart the driver:

- Through the AC input:disconnect the AC of the driver and power it again.
- Through dimming interface.
  DALI:send “OFF” command first,then send “MAX” command.
  pushDIM:short press pushbutton two times,then long press pushbutton.

Adjustable output current (AOC)

- The output current of the driver can be adjusted within a certain range, can be selected through the EasySet configuration software.

Corridor dimming (corridorDIM)

- Please see the "corridorDIM dimming" section.

Constant light output (CLO)

- The luminous flux of a LED decreases constantly over the life-time.
- The CLO function ensures that the emitted luminous flux remains stable.For that purpose the LED current will increase continuously over the LED life-time.
- In EasySet configuration it is possible to select a start value(in percent) and an expected life-time.The LED driver adjusts the current afterwards automatically.

Emergency lighting(EL)

- The driver works normally under DC input.
- When the driver is applied in DC input, the positive pole of the DC cable should be connected to the ACL/DC+ terminal, and the negative pole of the DC cable should be connected to the ACN/DC- terminal. If the connection is reversed, the driver will not be damaged, but it will affect the EL function normal work.
- The output response action after DC input can be set through the EasySet configuration software.
  Setting 1 : When DC input, the output of the driver remains unchanged, and the dimming function responds normally.
  Setting 2(default): When DC input, the output of the driver jumps to the set brightness of 15%,and the dimming function is invalid.

Configuration programming(EasySet)

- The programming configuration of the driver is realized using the BOKE EasySet programming suite and through the driver's DALI interface or NFC interface.
- Please see the "Device configuration" section.
- More information about the EasySet programming suite can be found at www.bokedriver.com.

Insulation between circuits

Isolation	Input	Output	Case	DALI	PUSH
Input	-	Double	Double	Basic	-
Output	Double	-	Basic	Double	Double
Case	Double	Basic	-	Double	Double

Label

BK-DQL042S-AHC1050ADN

Operating temperature & output current

Tc	Ta	Po(W)	Io(mA)
85°C	45°C	≤42	≤1050
	50°C	≤36	≤950
	60°C	≤30	≤700

Optional accessories (See the parts specification for details)

Model: BK-BAS014A
Wiring type:
Loop-in and loop-out

size(mm)

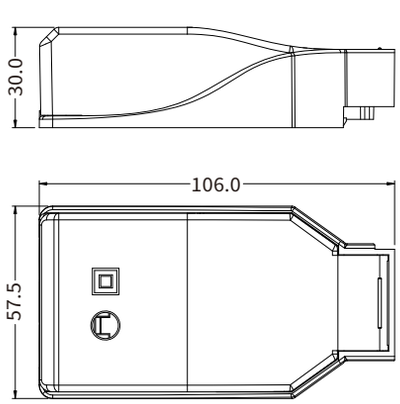

Cable diameter limit

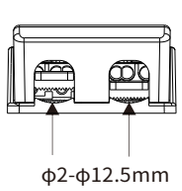

ϕ2-ϕ12.5mm

The allowable diameter of the input cable sheath is 2-12.5mm

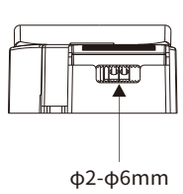

ϕ2-ϕ6mm

The allowable diameter of the output cable sheath is 2-6mm

Input wire:
0.75-2.5mm²

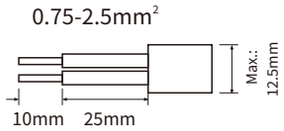

Output wire
0.5-1.0mm²

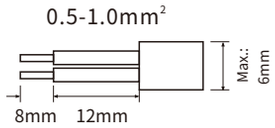

Attention: This accessory needs to be purchased separately.

DALI dimming application

Wiring diagram

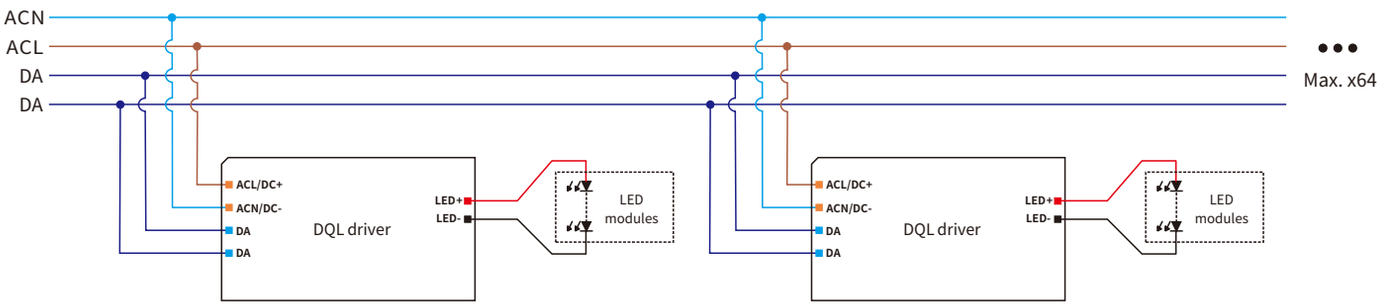

Switch to the DALI dimming mode

- After installation according to the wiring diagram of DALI dimming application,the driver will automatically switch to the DALI control mode after receiving any DALI command.

Remarks:

- Standard DALI control line voltage range:9.5V to 22.5V ,type 16V.
- The two DALI control lines polarity-reversible.
- Max. 64 DALI drivers per DALI control line.
- The maximum distance length of the DALI control line is 300m at 2×1.5mm^2.
- DALI bus can be wired together with any mains voltage cables, but separate wiring is recommended.

Please refer to the table below

Cable size	Distance
2×0.50mm^2	max.100m
2×0.75mm^2	max.150m
2×1.00mm^2	max.200m
⩾2×1.50mm^2	max.300m

Power-on level :

- When the driver is in DALI-2 dimming mode, the factory default level after each power-on is the brightest.
- The power-on level can be set through the DALI configuration tool or DALI application controller during installation, and can be set to memory or fixed any brightness (such as off, darkest, 50%, etc.).

Note: The recommended setting for the default factory power-on level of the DALI-2 driver is the brightest in the DALI-2 standard.

Dimming curve

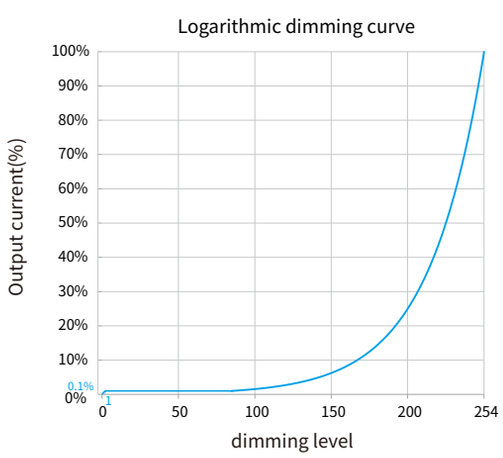

Remarks: The dimming curve can be selected by DALI configuration. The default is logarithmic dimming curve.

pushDIM dimming application

Wiring diagram

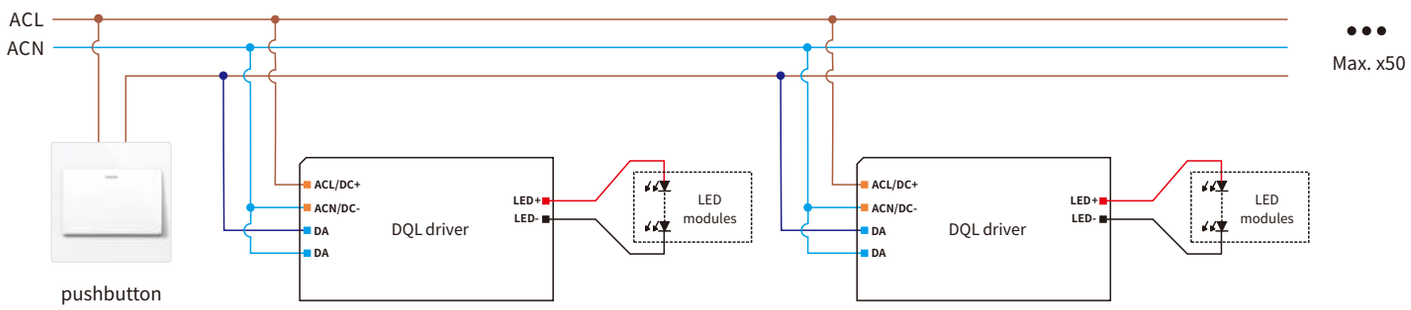

Switch to the pushDIM dimming mode

- After installation according to the wiring diagram of pushDIM dimming application, short press the pushbutton 5 times quickly within 3s , the driver will automatically switch to the pushDIM dimming mode.
- After switch to the pushDIM control mode, CorridorDIM mode will be automatically closed.

Remarks:

Max. 50 drivers per pushDIM control line.

Turn on or turn off:short press pushbutton for 0.2-1s.

Dimming: long press pushbutton for 1-5s.

Power on status: after power on,the light state will be the same as the lighting on state.

If the light is on before power on,the light will be on after power on again,brightness will be the same as the last lighting on brightness.

If the light is off before power off,the light will be off after power on again,short press the pushbutton,then the light will be on,the brightness will be the same as the last brightness.

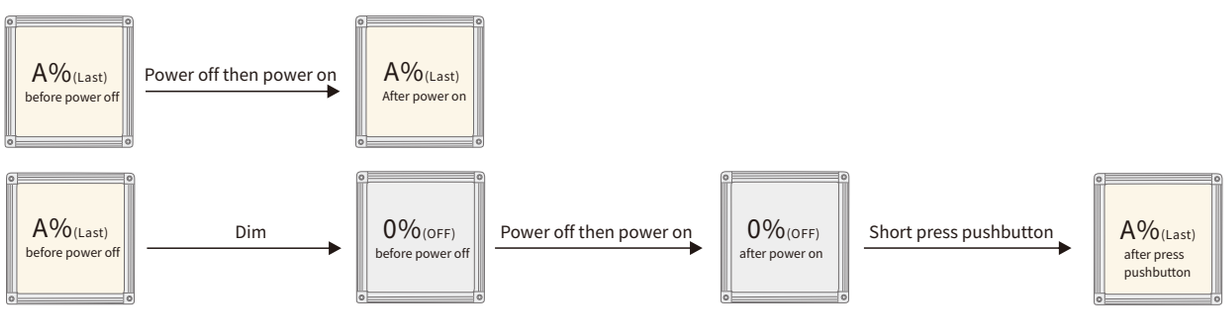

Multiple lights synchronize control operation

method 1:

Step 1:long press the pushbutton,confirm each light is on.

Step 2:short press the pushbutton,confirm each light is off.

Step 3:long press the pushbutton,confirm each light is from darkest to brightest and all the lights are synchronous.

method 2:

- Long press the pushbutton 15s,all lights output to the brightest state.

corridorDIM dimming application

Wiring diagram

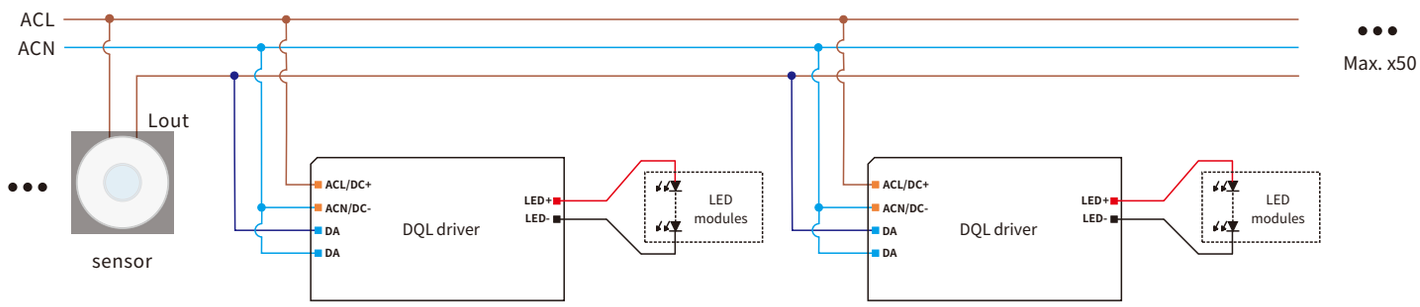

Switch to the corridorDIM dimming mode

- Method 1: Switch by sensor.

After installation according to the wiring diagram of corridorDIM dimming application, you can use the following two methods to switched.

Method 1: Keep the movement in the effective sensing area for 5 minutes, the corridorDIM dimming function of the driver will be switched and light up 100% (under the default setting).

Method 2: Switch by Hold-time

Set the hold-time of the sensor to more than 5 minutes. When the motion sensor detects a person and turns on the output for 5 minutes, the corridorDIM dimming function will be switched and the light will be on 100% (Default), finally restore the hold-time that the sensor actually needs.

-Method 2: Switch by normal switch

After installation according to the wiring diagram of the corridorDIM dimming application, first replace the sensor with a normal switch, and then turn on the normal switch for 5 minutes, and the driver will automatically switch to corridorDIM dimming mode, then remove the normal switch and replace it with the sensor.

- After switch to the corridorDIM dimming mode, the pushDIM dimming mode will be automatically deactivate .

Remarks

- During normal working,It is recommended to set the hold-time of the motion sensor to the minimum.
- Need to use a motion sensor with AC switch.

corridorDIM working process

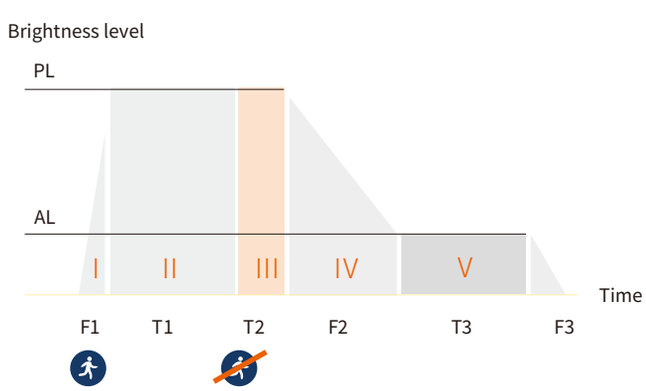

- The parameters of corridorDIM can be set through the configuration tool.
- corridorDIM is not activated by default.

Name	Symbol	Factory setting	Settable range
Fade-in time	F1	1s	0-100s
Presence level	PL	100%	0-100%
Hold-on time	T1	By sensor setting	
Run-on time	T2	180s	0-60000s
Fade-out time	F2	5s	0-100s
Absence level	AL	10%	0-100%
Stand-by Time	T3	unlimited	0-59999s,60000s(unlimited)
Fade-off time	F3	0s	0-100s

Device configuration

Optional 1:

BOKE EasySet(PC)

NFC Reader

The driver does not require power

BOKE EasySet(APP)

NFC bluetooth Reader

The driver does not require power

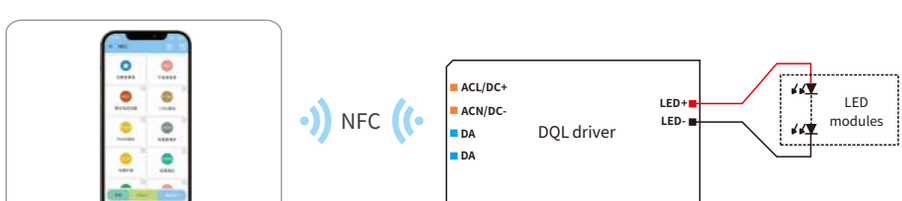

BOKE EasySet(APP)

The driver does not require power

NFC scan area

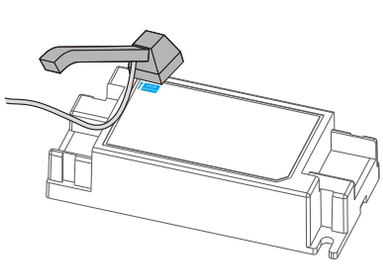

Error scanning mode

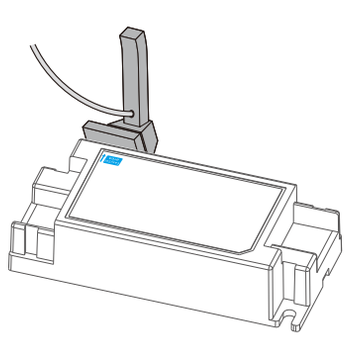

Correct scanning mode

Optional 2:

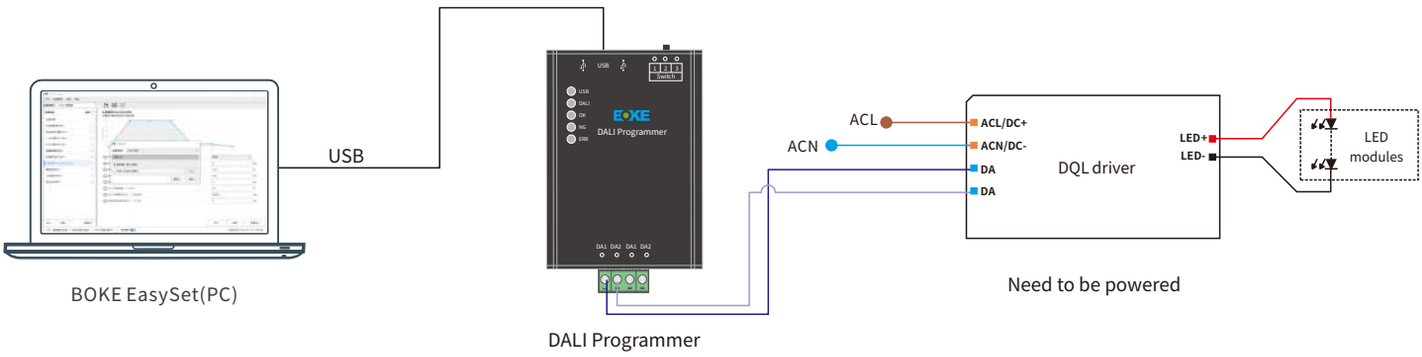

Software download(PC&mobile)

PC:Windows7/Windows10/Windows1132bit/64bit;
Mobile:Androidsystem≥6.0, iossystem≥14.0.

Configure tools and software

Type	Name	Brand	Name	BOKE EasySet minimum version(PC)	BOKE EasySet minimum version(APP)
Programmer	NFC desktop Reader	FEIG	CPR30+	V1.0.0	-
	NFC handheld Reader	FEIG	ID ISC-PRH101-USB	V1.2.2	-
	NFC Bluetooth Reader	FEIG	ID ECCO Smart HF-BLE	-	V1.0.0
	NFC batch Reader Kit	FEIG	RF-LRM1002-300/300 Kit	V1.3.4	-
	DALI programmer	BOKE	BK-CS01-SDL	V1.0.0	-
Software	PC Software	BOKE	BOKE EasySet	V1.0.0	-
	APP	BOKE	BOKE EasySet	-	V1.0.0

Parameters configure

Configuration items	Factory settings	Parameter configuration	Read/Write
Product information	-	NO	Read Only
Adjustable output current(AOC)	Activated	YES	Read/Write
PUSH dimming(pushDIM/pushCCT)	Activated	YES	Read/Write
Corridor dimming(corridorDIM)	Activated	YES	Read/Write
Emergency lighting(EL)	Activated	YES	Read/Write
Power-on fadeing(POF)	Deactivated	YES	Read/Write
Constant light output(CLO)	Deactivated	YES	Read/Write
Hot plug-in protection(HPP)	Deactivated	YES	Read/Write
Run-time(RT)		NO	Read Only
DALI Address(DA)	Activated	YES	Read/Write
DALI basic parameters(DP)	Activated	YES	Read/Write
DALI scene setting(DS)	Activated	YES	Read/Write
Other parameters		YES	

Note: The default factory mode of emergency lighting is derated mode, and the emergency brightness is 15%

Mechanical Specification

Unit:mm

BK-DQL042S(built-in)

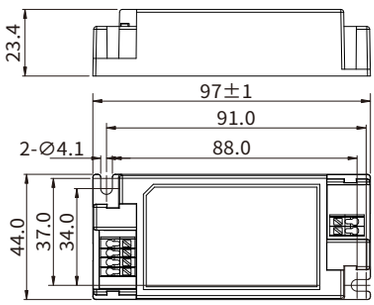

BK-DQL042S(independent)

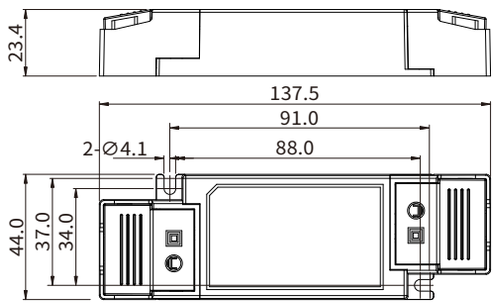

INPUT

numbering	function	colour
1	ACL/DC+	grey
2	ACN/DC-	grey
3	DA	grey
4	DA	grey

Input wire

0.5-1.5mm²(Built-in)

0.75-1.5mm²(Independent)

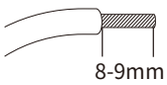

OUTPUT

numbering	function	colour
1	LED+	red
2	LED-	black

Output wire

0.5-1.0mm²

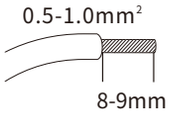

BK-DQL042S(optional accessory)

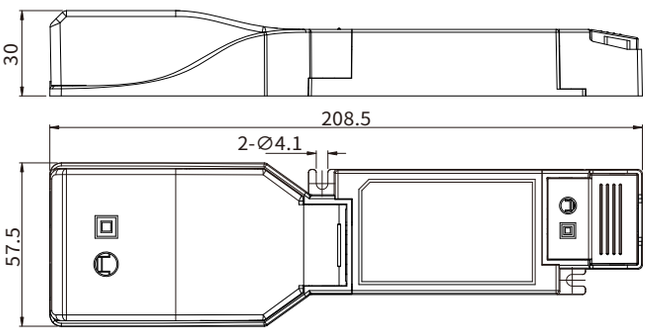

INPUT

Numbering	function	colour
1	ACL	white
	ACL	white
2	ACN	white
	ACN	white
3	E	white
	E	white
4	DA	white
	DA	white
5	DA	white
	DA	white

Input wire

0.75-2.5mm²

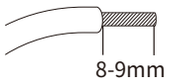

OUTPUT

Numbering	function	colour
1	LED+	red
2	LED-	black

Output wire

0.5-1.0mm²

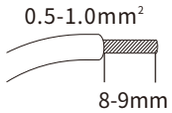

Installation note

Hot plug-in

- Hot plug-in is not supported due to residual output voltage of > 0 V.
- If a LED load is connected the device has to be restarted.
- Restart can be achieved by re-powering the driver or executing a on/off command (action) through the control interface.

Wiring guidelines

- All connections must be kept as short as possible to ensure good EMI behaviour.
- Mains leads should be kept apart from LED Driver and other leads (ideally 5 – 10 cm distance)
- Max. lenght of output wires is 2 m.
- Incorrect wiring can damage LED modules.

Replace LED module

1. Mains off
2. Wait more than 5 seconds
3. Remove LED module
4. Connect LED module again

Installation requirements

- The driver should be installed in a dry, acid-free, oil-free, fat-free environment.
- The installation ambient temperature of the drive shall not exceed the value of Ta at any time.
- The temperature of the mounting surface of the driver should be lower than the temperature of Ta.
- The driver should keep a certain distance from the heating stuff (such as the luminaire radiator).
- If the driver is used externally (it needs to be used with the accessories), the installation of the driver should also meet the following conditions:
  1.The driver should be a certain distance between the drivers, as shown in Figure 1.
  2.The driver keeps a certain distance from surrounding objects, as shown in Figure 2.

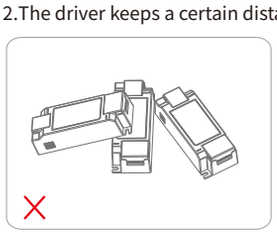

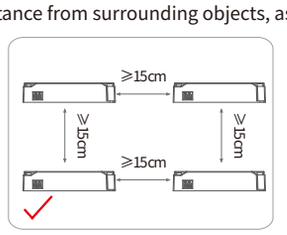

Figure 1

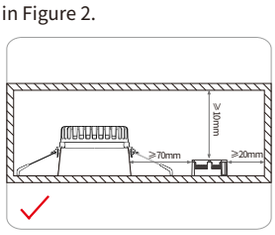

Figure 2

Packaging

Product | Packaging | 20pcs×3boxes=60pcs/CTN

Model	Product size	Weight	Packaging size	Carton size	Qty/carton	N.W	G.W
DQL042S(bilt-in)	L97.5*W44*H23.4mm	134g	L210*W122*H94mm	L300*W230*H150mm	60pcs	8.04kg	9.05kg

Product | Packaging | 20pcs×3boxes=60pcs/CTN

Model	Product size	Weight	Packaging size	Carton size	Qty/carton	N.W	G.W
DQL042S(independent)	L137.5*W44*H23.4mm	152g	L252*W142*H94mm	L300*W270*H170mm	60pcs	9.12kg	10.2kg

Product | Packaging | 20pcs×2boxes=40pcs/CTN

Model	Product size	Weight	Packaging size	Carton size	Qty/carton	N.W	G.W
DQL042S(independent)	L208.5*W57.5*H30mm	202g	L282*W213*H122mm	L300*W265*H230mm	40pcs	8.08kg	9.45kg

Additional information

1. The life and MTBF of the product are for reference only, and do not represent a warranty statement.
2. For more information, please send an email to info@bokedriver.com.